(A)

SIGN CLEARANCE

(a)

Community Development Department
250 North 5th Street
Grand Junction CO 81501
(970) 244-1430

Clearance No. None
Date Submitted 12-16-02
Fee $ 25.00
Zone C-2

TAX SCHEDULE 2945-091-21-001
BUSINESS NAME BORDERS BOOKS
STREET ADDRESS 2464 HWY 6&50 #F
PROPERTY OWNER GRAND MESA CENTER
OWNER ADDRESS SAME

CONTRACTOR BUD'S SIGNS
LICENSE NO. 2020157
ADDRESS 1055 UTE AVE
TELEPHONE NO. 245-7700
CONTACT PERSON BUD PREUSS

[X]	1. **FLUSH WALL**	2 Square Feet per Linear Foot of Building Facade
[ ]	2. **ROOF**	2 Square Feet per Linear Foot of Building Facade
[ ]	3. **FREE-STANDING**	2 Traffic Lanes - 0.75 Square Feet x Street Frontage 4 or more Traffic Lanes - 1.5 Square Feet x Street Frontage
[ ]	4. **PROJECTING**	0.5 Square Feet per each Linear Foot of Building Facade
[ ]	5. **OFF-PREMISE**	See #3 Spacing Requirements; Not > 300 Square Feet or < 15 Square Feet

[ ] **Externally Illuminated** [X] **Internally Illuminated** [ ] **Non-Illuminated**

(1 - 5) Area of Proposed Sign: 128.4 Square Feet
(1,2,4) Building Façade: 126 Linear Feet
(1 - 4) Street Frontage: _____ Linear Feet
(2 - 5) Height to Top of Sign: _____ Feet Clearance to Grade: _____ Feet
(5) Distance from all Existing Off-Premise Signs within 600 Feet: _____ Feet

per sign package.

EXISTING SIGNAGE/TYPE:

_____ _____ Sq. Ft.
_____ _____ Sq. Ft.
_____ _____ Sq. Ft.
Total Existing: 0 Sq. Ft.

● FOR OFFICE USE ONLY ●

Signage Allowed on Parcel:
Building _____ Sq. Ft.
Free-Standing _____ Sq. Ft.
Total Allowed: 218.8 Sq. Ft.

COMMENTS: ANCHOR "F" IS ALLOWED 218.8 ft
AS PER COMPREHENSIVE SIGNAGE PACKAGE

NOTE: No sign may exceed 300 square feet. A separate sign clearance is required for each sign. Attach a sketch, to scale, of proposed and existing signage including types, dimensions and lettering. Attach a plot plan, to scale, showing: abutting streets, alleys, easements, driveways, encroachments, property lines, distances from existing buildings to proposed signs and required setbacks. **A SEPARATE PERMIT FROM THE BUILDING DEPARTMENT IS ALSO REQUIRED.**

I hereby attest that the information on this form and the attached sketches are true and accurate.

Applicant's Signature	Date	Community Development Approval	Date
[signature]	12-16-02	C. Faye Gibson	12/20/02

(White: Community Development) *(Canary: Applicant)* *(Pink: Building Dept)* *(Goldenrod: Code Enforcement)*

(B)

SIGN CLEARANCE

Community Development Department
250 North 5th Street
Grand Junction CO 81501
(970) 244-1430

Clearance No. _____
Date Submitted 12-16-02
Fee $ 5.00
Zone C-2

TAX SCHEDULE 2945-091-21-001
BUSINESS NAME BORDERS BOOKS
STREET ADDRESS 2464 HWY 6150 "F"
PROPERTY OWNER GRAND MESA CENTER
OWNER ADDRESS SAME

CONTRACTOR Bud's Signs
LICENSE NO. 2020157
ADDRESS 1055 UTE AVE
TELEPHONE NO. 245-7700
CONTACT PERSON Bud Preuss

[X] 1. **FLUSH WALL** — 2 Square Feet per Linear Foot of Building Facade
[ ] 2. **ROOF** — 2 Square Feet per Linear Foot of Building Facade
[ ] 3. **FREE-STANDING** — 2 Traffic Lanes - 0.75 Square Feet x Street Frontage; 4 or more Traffic Lanes - 1.5 Square Feet x Street Frontage
[ ] 4. **PROJECTING** — 0.5 Square Feet per each Linear Foot of Building Facade
[ ] 5. **OFF-PREMISE** — See #3 Spacing Requirements; Not > 300 Square Feet or < 15 Square Feet

[ ] **Externally Illuminated** [X] **Internally Illuminated** [ ] **Non-Illuminated**

(1 - 5) Area of Proposed Sign: 72.3 Square Feet
(1,2,4) Building Façade: 126 Linear Feet
(1 - 4) Street Frontage: _____ Linear Feet
(2 - 5) Height to Top of Sign: _____ Feet Clearance to Grade: _____ Feet
(5) Distance from all Existing Off-Premise Signs within 600 Feet: _____ Feet

per signage package

EXISTING SIGNAGE/TYPE:

SIGN (A) FLUSH WALL	128.4 Sq. Ft.
	Sq. Ft.
	Sq. Ft.
Total Existing:	128.4 Sq. Ft.

FOR OFFICE USE ONLY

Signage Allowed on Parcel:

Building	_____ Sq. Ft.
Free-Standing	_____ Sq. Ft.
Total Allowed:	218.8 Sq. Ft.

COMMENTS: ANCHOR "F" IS ALLOWED 218.8 AS PER COMPREHENSIVE SIGNAGE PACKAGE

NOTE: No sign may exceed 300 square feet. A separate sign clearance is required for each sign. Attach a sketch, to scale, of proposed and existing signage including types, dimensions and lettering. Attach a plot plan, to scale, showing: abutting streets, alleys, easements, driveways, encroachments, property lines, distances from existing buildings to proposed signs and required setbacks. **A SEPARATE PERMIT FROM THE BUILDING DEPARTMENT IS ALSO REQUIRED.**

I hereby attest that the information on this form and the attached sketches are true and accurate.

Applicant's Signature	Date	Community Development Approval	Date
[redacted]	12-16-02	C. Faye Hansen	2/20/02

(White: Community Development) *(Canary: Applicant)* *(Pink: Building Dept)* *(Goldenrod: Code Enforcement)*

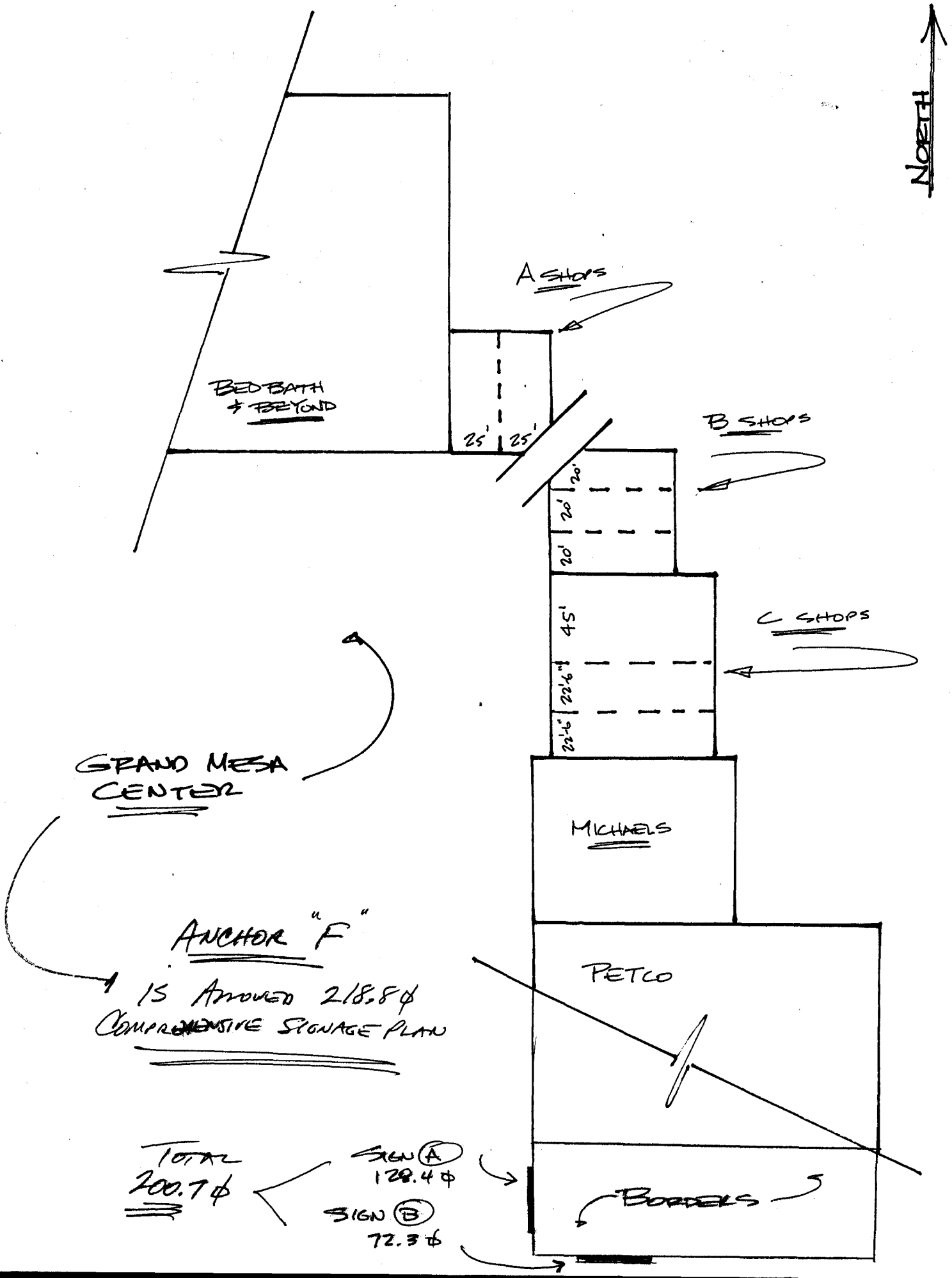
NORTH
A SHOPS
BED BATH & BEYOND
25'
25'
B SHOPS
20'
20'
20'
45'
22'-6"
22'-6"
C SHOPS
GRAND MESA CENTER
MICHAELS
ANCHOR "F"
IS APPROVED 218.8 ¢
COMPREHENSIVE SIGNAGE PLAN
PETCO
TOTAL
200.7 ¢
SIGN (A)
128.4 ¢
SIGN (B)
72.3 ¢
BORDERS

(A) WEST ELEVATION

BORDERS

48" INTERNALLY ILLUMINATED LETTER SET
Remote/Flush Mounted (Black/White Faces)

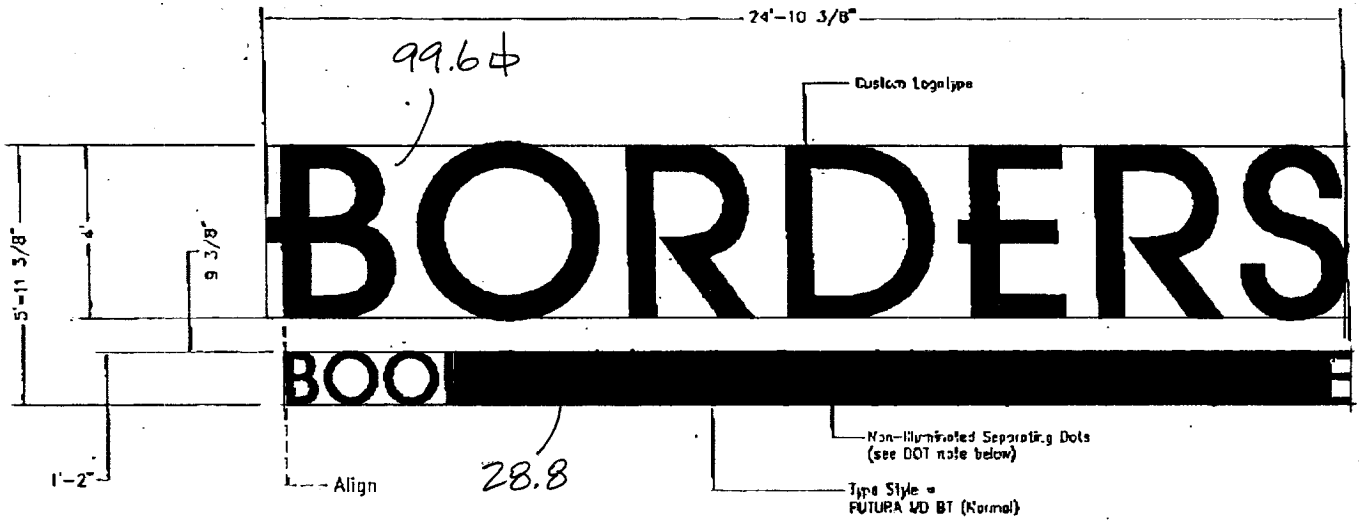

48" Letter Set Layout (Black/White Faces)

1/2" = 1'-0"

~~NEW LAYOUT AS OF 3/27/02~~

128.4# TOTAL

FACE NOTE:

- ALL letter faces will be #7328 WHITE Plexiglas w/ 3M BLACK PERFORATED FILM applied to first surface. Letters will be Black during the day and illuminate White at night.

DOT NOTE:

- All Separating Dots will be Non-Illuminated Reverse Channel Type Letters. Dots will be fabricated having .100 aluminum faces w/ 5" deep .050 aluminum returns. Dot faces & returns to have a BLACK urethane enamel finish.

GENERAL NOTES:

- SPST disconnect switch locate behind wall
- caulk required
- Weep holes required 3/8" dia.
- Amount of screws(in faces) determined by letter assembly
- All electrical cuts must remain together for either raceway or remote set-up middle or bottom to be determined

LETTER CROSS SECTION

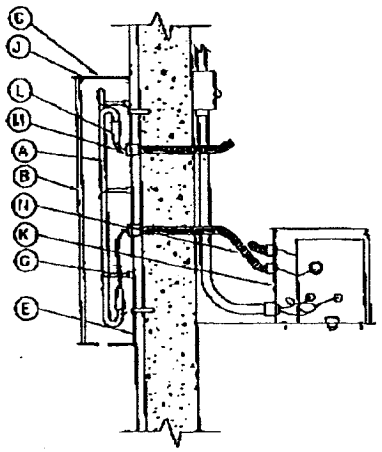

LETTER SPECIFICATIONS

(A) Neon	Color/DIA.	15mm #6500 KS WHITE
(B) Face	Color	SEE FACE NOTE
	Gauge	3/16"
(C) Return	Depth	5"
	Color/Finish	BLACK Pre-Coil
	Gauge	.040 x 5.3" Pre-Coil Coil
(D) Retainer	Color	BLACK
	Type	3/4" Trim cap
(E) Backs	Material	.063 Aluminum
(F) Raceway	Color	N/A
	Size/material	N/A
	Mounting	N/A
(G) Tube support	Type/Ht.	Cross-1-3/4"
(H) Transformer	Type/m.a.	60 m.a. Remote
(I) Kicker	—	N/A
(J) Face screws	—	#4 .5" lg. phillips hd. "Black"
(K) Electrical housing		Wireway
(L) Boot insulated		Standard
(M) CFO insulated sleeve		Standard
(N) Electrical connectors		3/8" Greenfield

Kieffer & Co. Inc.
S. BEBOYGAN OFFICE
PO BOX 8017
SHEBOYGAN WI 53082-8017
ATLANTA CHICAGO MILWAUKEE
Corporate Headquarters Sheboygan, WI

CUSTOMER
BORDERS

LOCATION
VARIOUS

DESIGNED BY: LMK
ACCT REP: P. Ryan
DATE: 5 / 28 / 02

APPROVED BY: _____
DATE: _____

© 2002 KIEFFER & CO., INC.
THIS IS AN ORIGINAL UNPUBLISHED DRAWING SUBMITTED FOR YOUR INFORMATION WITH A PROJECT DONE PLANNED FOR YOU BY KIEFFER & CO., INC. IT IS NOT TO BE REPRODUCED, DISPLAYED OR DISCLOSED IN ANY MANNER WHICH SHALL BE WITHOUT PERMISSION OF KIEFFER & CO., INC.

c UL us LISTED

DATE
NAME
REVISION

C45665
SHEET 1 OF 1
COMPANION FILES
Internal-
Matlow
Cargile
CASMaster
AutoCAD-

DEC. 4, 2002 9:48AM KIEFFER/BUFFALO GR NO. 507 P. 4/5

(B) SOUTH ELEVATION

BORDERS

36" INTERNALLY ILLUMINATED LETTER SET
Remote/Flush Mounted (Black/White Faces)

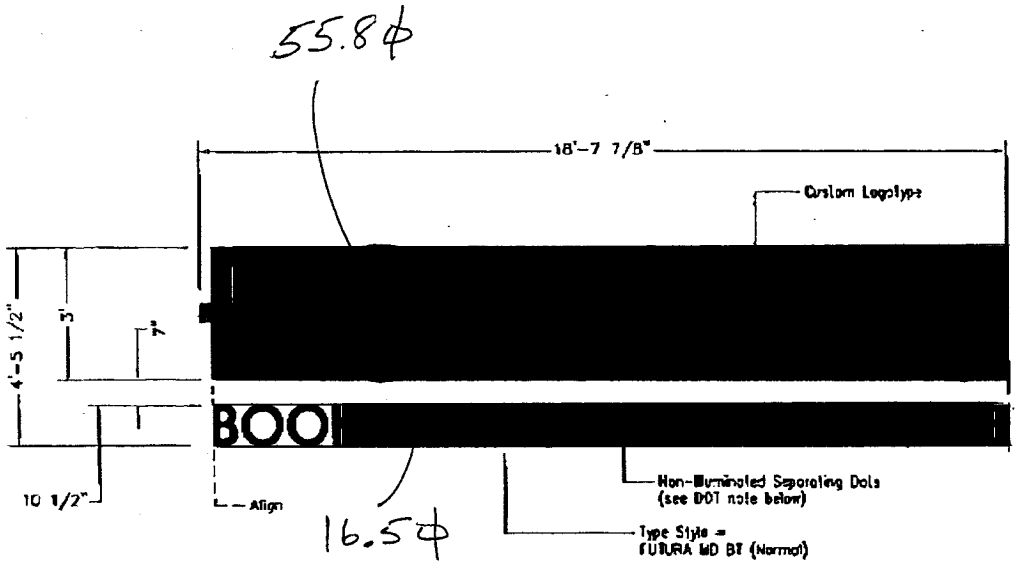

36" Letter Set Layout (Black/White Faces)

1/2" = 1'-0"

NEW LAYOUT AS OF 3/27/02

72.3¢

FACE NOTE:

- ALL letter faces will be #7328 WHITE Plexiglas w/ 3M BLACK PERFORATED FILM applied to first surface. Letters will be Black during the day and illuminate White at night.

DOT NOTE:

- ALL Separating Dots will be Non-Illuminated Reverse Channel Type Letters. Dots will be fabricated having .100 aluminum faces w/ 5" deep .050 aluminum returns. Dot faces & returns to have a BLACK urethane enamel finish.

GENERAL NOTES:

- SPST disconnect switch locate behind wall
- caulk required
- weep holes required 3/8" dia.
- Amount of screws(in faces) determined by letter assembly
- All electrical cuts must remain together for either raceway or remote set-up middle or bottom to be determined

LETTER CROSS SECTION

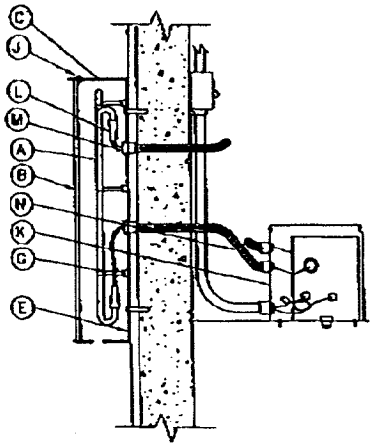

LETTER SPECIFICATIONS

A	Neon	Color/DIA.	15mm #6500 KS WHITE
B	Face	Color	SEE FACE NOTE
		Gauge	3/16"
C	Return	Depth	5"
		Color/Finish	BLACK Pre-Coat
		Gauge	.040 x 5.3" Pre-Coat Coil
D	Retainer	Color	BLACK
		Type	3/4" Trim cap
E	Backs	Material	.063 Aluminum
F	Raceway	Color	N/A
		Size/material	N/A
		Mounting	N/A
G	Tube support	Type/HL	Glass-1-3/4"
H	Transformer	Type/m.a.	60 m.a. Remote
I	Kicker	–	N/A
J	Face screws	–	#4 .5" lg. phillips hd. "Black"
K	Electrical housing		Wireway
L	Boot insulated		Standard
M	GTO insulated sleeve		Standard
N	Electrical connectors		3/8" Greenfield

Kieffer & Co. Inc.
SHEBOYGAN OFFICE
PO BOX 1987
SHEBOYGAN, WI. 53082-1987
ATLANTA CHICAGO MILWAUKEE
Corporate Headquarters: Sheboygan, WI.

CUSTOMER
BORDERS

LOCATION
VARIOUS

DESIGNED BY: ETD
ACCT REP: P. Ryan
DATE: 6/10/02

APPROVED BY
DATE

© 2002 KIEFFER & CO. INC.

c UL us LISTED

DATE
NAME
REVISION

C45751
SHEET 1 OF 1
COMPANION FILES
Intersdi-
Match-
Corel-
CASmate-
AutoCAD-

DEC. 4.2002 9:48AM KIEFFER/BUFFALO GR NO.507 P.5/5

BORDERS

Site Drawing
Misc. Signage as Noted

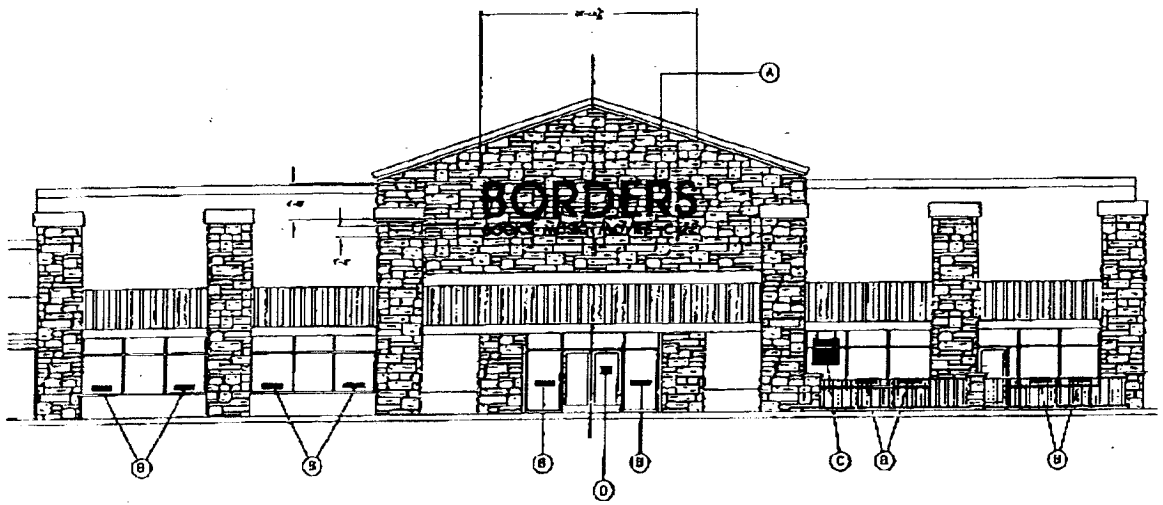

FRONT ELEVATION

Scale 1/8" = 1'-0"

(A) 48" REMOTE LETTER SET - Reference fabrication drawing #C45655 for decorating & construction specifications.

(B) "BORDERS" WINDOW VINYL - Reference fabrication drawings A44283 & C44285 for decorating & construction specifications.

(C) Interior E-BAR Window Sign - Reference fabrication drawings A44284 & C44284 for decorating & construction specifications.

(D) STORE HOURS WINDOW VINYL - Reference fabrication drawings A44285 & for decorating & construction specifications.

WEST ELEVATION

Kieffer INC.
GREEN/CANOFFICE
PO BOX 1167
SHEBOYGAN, WI 53082-1167
ATLANTA CHICAGO MILWAUKEE
Corporate headquarters Sheboygan, WI

CUSTOMER
BORDERS

LOCATION
Grand Mesa Center
Grand Junction, CO

DESIGNED BY: DMK
ACCT REP: P. Ryan
DATE: 5 / 23 / 02

© 2002 KIEFFER & CO., INC.

UL LISTED

REVISION	NAME	DATE
A Changed to 3M Engineered Film		

JOB#	
-001	
-002	
-003	
-004	
-005	

C45647

SHEET 1 OF 1
COMP/ANCH FILES
Interior-
Window-
Exterior-
Auxiliary-
AutoCAD-

BORDERS

Site Drawing
Misc. Signage as Noted

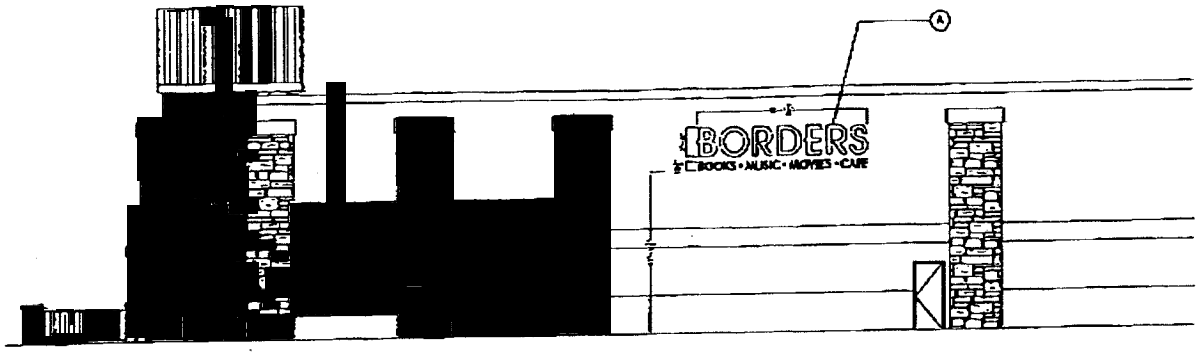

Note:
Bottom of sign (letters) must be a minimum of 16'–18' above grad to allow for future tree plantings.

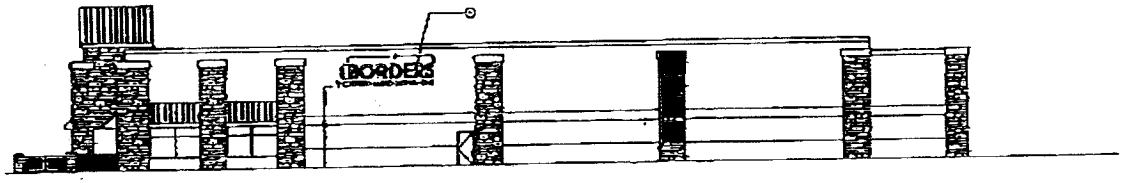

SIDE ELEVATION

Scale: 1/8" = 1'-0"

SOUTH ELEVATION

(A) 26" REMOTE LETTER SET – Reference fabrication drawing #C45751 for decorating & construction specifications.

Kieffer SIGNING

SHEBOYGAN OFFICE
PO BOX 1127
SHEBOYGAN, WI 53082-1127
ATLANTA DENVER CHICAGO MILWAUKEE
Corporate headquarters Sheboygan, WI

CUSTOMER
BORDERS

LOCATION
Grand Mesa Center
Grand Junction, CO

DESIGNED BY: E. Davies
ACCT REP: P. Ryan
DATE: 5 / 23 / 02
APPROVED BY:
DATE

© 2002 KIEFFER & CO., INC.

UL LISTED

NAME	DATE
J.M.	06/12/02
J.D.	06/14/02

REVISION
1. Changed title Sh. Block, Engineered Plan
2. Moved sign up 3in. Added 3in. Added DRAWN

C45647a

JOB#
.001
.002
.003
.004
.005

SHEET 1 OF 1
COMPANION FILES
Internal –
Vector –
Scan –
Raster –
AutoCAD –