FEE $	10.00
TCP $	1587.00
SIF $	460.00

PLANNING CLEARANCE

(Single Family Residential and Accessory Structures)

Community Development Department

BLDG PERMIT NO.

PH

Building Address 2981 G ROAD

Parcel No. 2943-051-54-005

Subdivision HAMLIN SUB (1487)

Filing _____ Block _____ Lot 2

No. of Existing Bldgs Ø No. Proposed 1

Sq. Ft. of Existing Bldgs Ø Sq. Ft. Proposed 3300

Sq. Ft. of Lot / Parcel 10 ACRES

Sq. Ft. Coverage of Lot by Structures & Impervious Surface (Total Existing & Proposed) Ø 4300

Height of Proposed Structure 20'

OWNER INFORMATION:

Name ROB, JUDY LAUZIN

Address 2985 G ROAD

City / State / Zip GJ CO 81504

APPLICANT INFORMATION:

Name BRAD THOMPSON

Address 562 SHOSHONE ST

City / State / Zip GJ CO 81504

Telephone 216-2884

DESCRIPTION OF WORK & INTENDED USE:

- [X] New Single Family Home (*check type below)
- [ ] Interior Remodel
- [ ] Addition
- [ ] Other (please specify): _____

*TYPE OF HOME PROPOSED:

- [X] Site Built
- [ ] Manufactured Home (UBC)
- [ ] Manufactured Home (HUD)
- [ ] Other (please specify): _____

NOTES: _____

REQUIRED: One plot plan, on 8 1/2" x 11" paper, showing all existing & proposed structure location(s), parking, setbacks to all property lines, ingress/egress to the property, driveway location & width & all easements & rights-of-way which abut the parcel.

THIS SECTION TO BE COMPLETED BY COMMUNITY DEVELOPMENT DEPARTMENT STAFF

ZONE R-R

SETBACKS: Front 20 from property line (PL)

Side 50 from PL Rear 50 from PL

Maximum Height of Structure(s) 35'

Voting District _____ Driveway Location Approval JAR (Engineer's Initials)

Maximum coverage of lot by structures 5%

Permanent Foundation Required: YES X NO _____

Parking Requirement 2

Special Conditions _____

Modifications to this Planning Clearance must be approved, in writing, by the Community Development Department. The structure authorized by this application cannot be occupied until a final inspection has been completed and a Certificate of Occupancy has been issued, if applicable, by the Building Department (Section 305, Uniform Building Code).

I hereby acknowledge that I have read this application and the information is correct; I agree to comply with any and all codes, ordinances, laws, regulations or restrictions which apply to the project. I understand that failure to comply shall result in legal action, which may include but not necessarily be limited to non-use of the building(s).

Applicant Signature [signature] Date 7-26-07

Department Approval JAR Bayleen Henderson Date _____

Additional water ~~and~~/or sewer tap fee(s) are required:	YES	NO	W/O No. Septic (see Attached)
Utility Accounting		Date 8/21/07	

VALID ~~FOR SIX MONTH~~S FROM DATE OF ISSUANCE (Section 2.2.C.1 Grand Junction Zoning & Development Code)

(White: Planning) ***(Yellow: Customer)*** ***(Pink: Building Department)*** ***(Goldenrod: Utility Accounting)***

HAMLIN SUBDIVISION

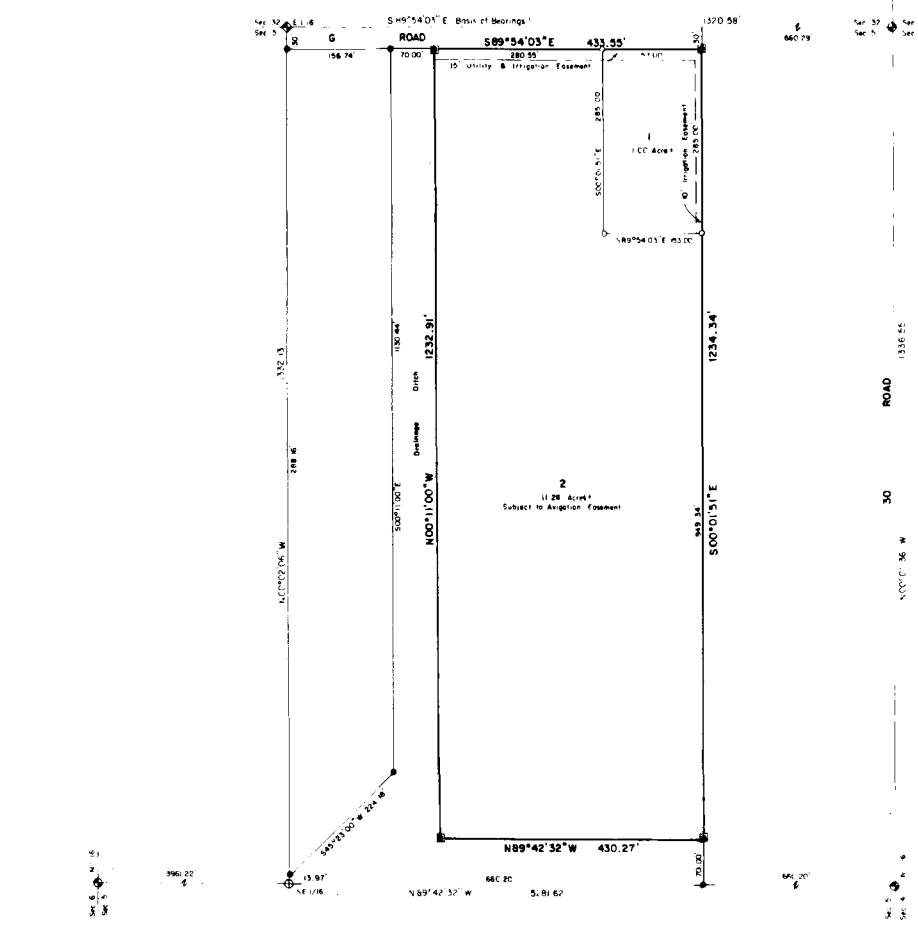

N

SCALE 1" = 100'

0 100 200 300 400

- Found Mesa County Survey Marker Brass Cap
- Found G.L.O. Brass Cap
- Found U.S.B.O.R. Aluminum Cap 1984 18467
- Found 5/8" Rebar & Cap PLS 18467
- Set 5/8" Rebar & Cap PLS 18467
- Concrete Color Around Monument
- Found 2 1/2" Pipe & Aluminum Cap PLS 18467

COUNTY PLANNING COMMISSION CERTIFICATE

Approved this 23 day of July A.D. 1987.
County Planning Commission, County of Mesa, State of Colorado.

Mary K. Fuller
Chairperson

BOARD OF COUNTY COMMISSIONER'S CERTIFICATE

Approved this 27 day of July A.D. 1987.
Board of County Commissioners, County of Mesa, State of Colorado.

R. W. Hoff Jones
Chairperson

SURVEYOR'S CERTIFICATE

I, John Robert Lehti, do hereby certify that to the best of my knowledge and beliefs, the accompanying plat of HAMLIN SUBDIVISION, a subdivision of a part of the County of Mesa, State of Colorado, has been prepared under my direct supervision and accurately represents a field survey of same.

7/8/87
Date

John Robert Lehti
John Robert Lehti
Registered Professional Land Surveyor
P.L.S. #18467

18467

UTILITIES COORDINATING COMMITTEE

7-8-87
Date

Harold L. Ball Jr.
Chairperson

DEDICATION

KNOW ALL MEN BY THESE PRESENTS:

That the undersigned, Harriet G. Hamlin, is the owner of that real property as described in Book 1642 at Page 126, of the records in the Mesa County Clerk and Recorder's Office, and being described as follows:

A tract or parcel of land situated in the W½ of Lot 1 of Section 5, Township 1 South, Range 1 East of the Ute Meridian, County of Mesa, State of Colorado, and considering that the North line of said Lot 1 is assumed to bear N.89°54'03"W., with all bearings contained herein being relative thereto, is more particularly described as follows:
Commencing at the Northwest Corner of Lot 1 of said Section 5; thence S.00°02'06"E., along the West line of said Lot 1, 30.00 feet; thence S.89°54'03"E., parallel to the North line of said Lot 1 226.74 feet to the Point of Beginning; thence S.00°11'00"E. 1232.91 feet to a point 70.00 feet North of the South line of said Lot 1; thence S.89°42'32"E., parallel to said South line, 430.27 feet to a point on the East line of the W½ of said Lot 1; thence N.00°01'51"W., along said East line 1234.34 feet to a point 30.00 feet Southerly of the Northeast Corner of the W½ of said Lot 1; thence N.89°54'03"W., parallel to the North line of said Lot 1, 433.55 feet to the Point of Beginning.

That said owner has caused the said real property to be laid out and surveyed as HAMLIN SUBDIVISION, a subdivision of a part of the County of Mesa, in the State of Colorado.

That said owner does hereby dedicate and set apart all of the streets and roads as shown on the accompanying plat to the use of the public forever, and hereby dedicate to the Public Utilities those portions of the said real property which are labeled as utility easements on the accompanying plat as perpetual easements for the installation and subsequent maintenance of utilities, irrigation, and drainage facilities, including but not limited to electrical lines, gas lines, and telephone lines, together with the right to trim interfering trees and brush, with perpetual rights of ingress and egress for the installation and subsequent maintenance of such lines. Said easements and rights shall be utilized in a reasonable and prudent manner.

That all expenses for street paving or improvements shall be borne by the seller or purchaser, not by the COUNTY OF MESA.

IN WITNESS WHEREOF said owner has caused her name to be hereunto subscribed this 9th day of July A.D. 1987.

Harriet G. Hamlin
Harriet G. Hamlin

STATE OF COLORADO)
COUNTY OF MESA) ss

The foregoing instrument was acknowledged before me this 9th day of July A.D. 1987 by Harriet G. Hamlin.

My commission expires 27 May 1990
Witness my hand and official seal

Cecil D. Caster
Cecil D. Caster, Notary Public
1005 North 11th, Street Suite 206
Grand Junction, Colorado 81501

CECIL D. CASTER
NOTARY PUBLIC
STATE OF COLORADO

CLERK AND RECORDER'S CERTIFICATE

STATE OF COLORADO)
COUNTY OF MESA) ss

I hereby certify that this instrument was filed in my office at 1:32 o'clock P.M. this 5th day of August A.D. 1987 and is duly recorded as Reception Number 1462172 in PLAT BOOK 13 at PAGES 369 thru — inclusive. Fees $ 17.00.

Earl Dwyer
Clerk & Recorder

Deputy

Deposit 3-68

ALWAYS THINK SAFETY

HAMLIN SUBDIVISION
Located in Lot 1 of Section 5,
Township 1 South Range 1 East of
the Ute Meridian County of Mesa
State of Colorado

Monument Surveying Co.

241-1273		

DRAWN JRL	FIELD APPROVAL
CHECKED JRL	FINAL APPROVAL
DATE	APPROVED
Harriet G. Hamlin	SUB 87-1

01123701.tif

ACCEPTED JAR Gayleen Henderson
ANY CHANGE OF SETBACKS MUST BE APPROVED BY THE CITY PLANNING DEPT. IT IS THE APPLICANT'S RESPONSIBILITY TO PROPERLY LOCATE AND IDENTIFY EASEMENTS AND PROPERTY LINES.

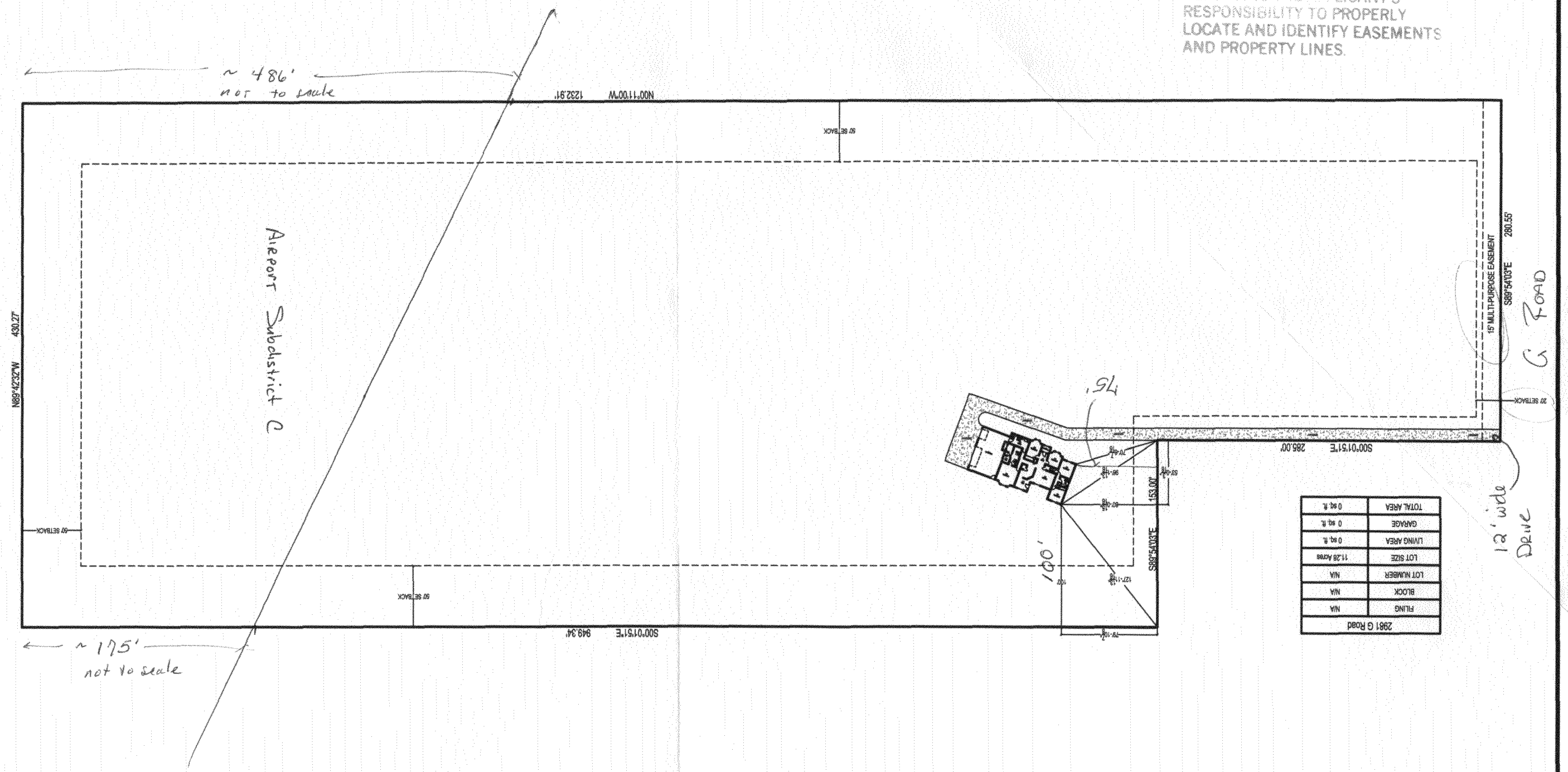

2981 G Road	
FILING	N/A
BLOCK	N/A
LOT NUMBER	N/A
LOT SIZE	11.28 Acres
LIVING AREA	0 sq. ft.
GARAGE	0 sq. ft.
TOTAL AREA	0 sq. ft.

2981 G Road Site Plan

Grand Junction, CO.

Advanced Drafting Technicians LLC
Drafting and Design
1100 Hillcrest Ave #B
Grand Junction CO 81501
Phone (970) 245-8646 Fax (970) 243-4521

Revisions	
A	
B	
C	
D	
E	

Drawn By: ADT
REV Date: 8/9/07
Date: 5/9/07
Scale: NTS
Site Plan
Sheet: C1