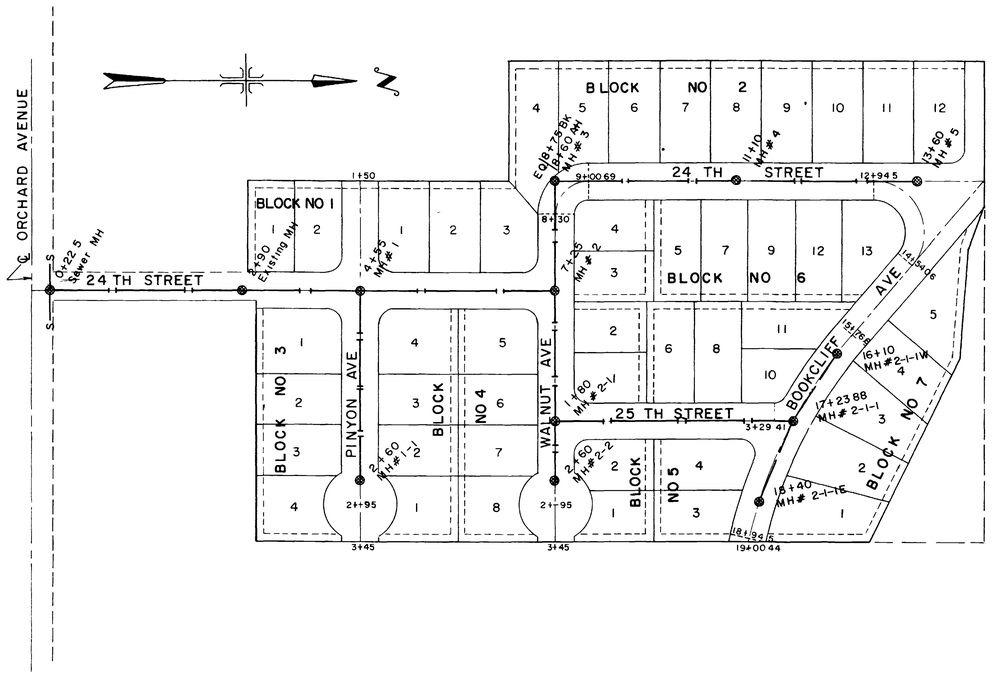


PLAN
SCALE 1" = 100'

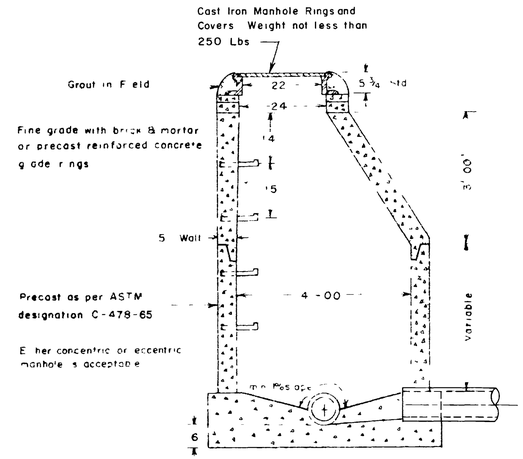


STANDARD MANHOLE

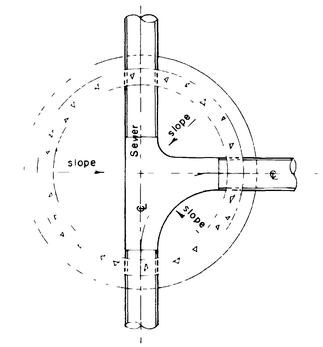


MANHOLE BASE

WESTERN ENGINEERS INC
SEWER PLAN AND PROFIL
ARBOR VILLAGE
CITY OF GRAND JUNCTION
MESA COUNTY, COLORADO
ENGINEERED RJM DRAWN RJM TRACED GLA
GRAND JUNCTION, COLO DWG 1-682 3 1/14.

PROFILE
VERTICAL SCALE 1" = 10'
HORIZONTAL SCALE 1" = 100'

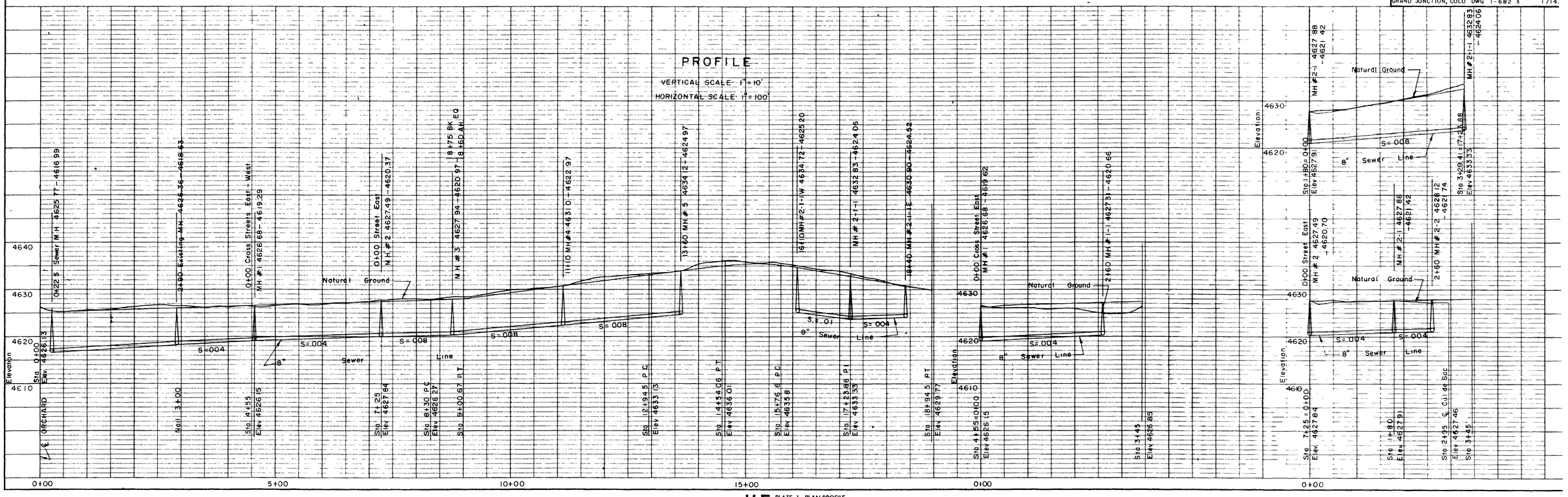


K+E PLATE 1, PLAN PROFILE
REUFFEL & ESSER CO
46 7008 ALBANENE TRACING PAPER

02094101.tif